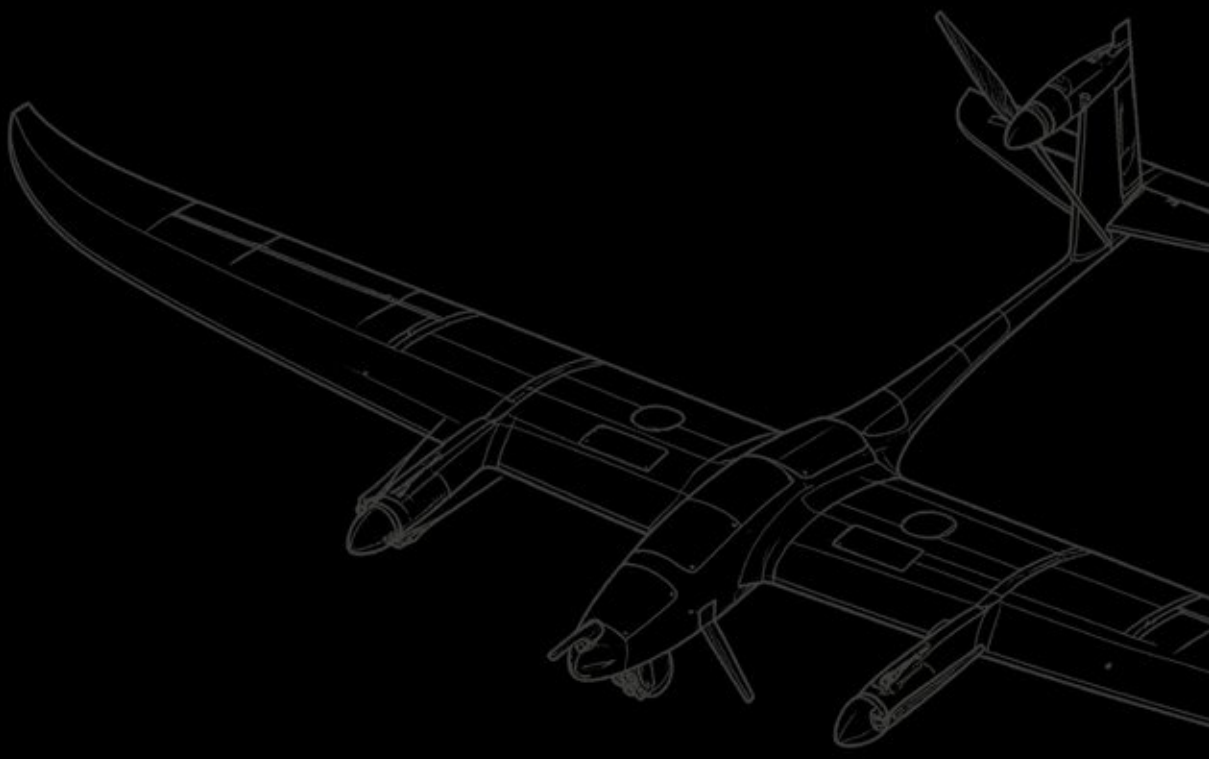

KALKAN DEFENCE
INDUSTRY AND TECHNOLOGIES INC.

[2026] [KALKANSAVUNMA.COM]

DEFENSE PRODUCTS PORTFOLIO - 2026

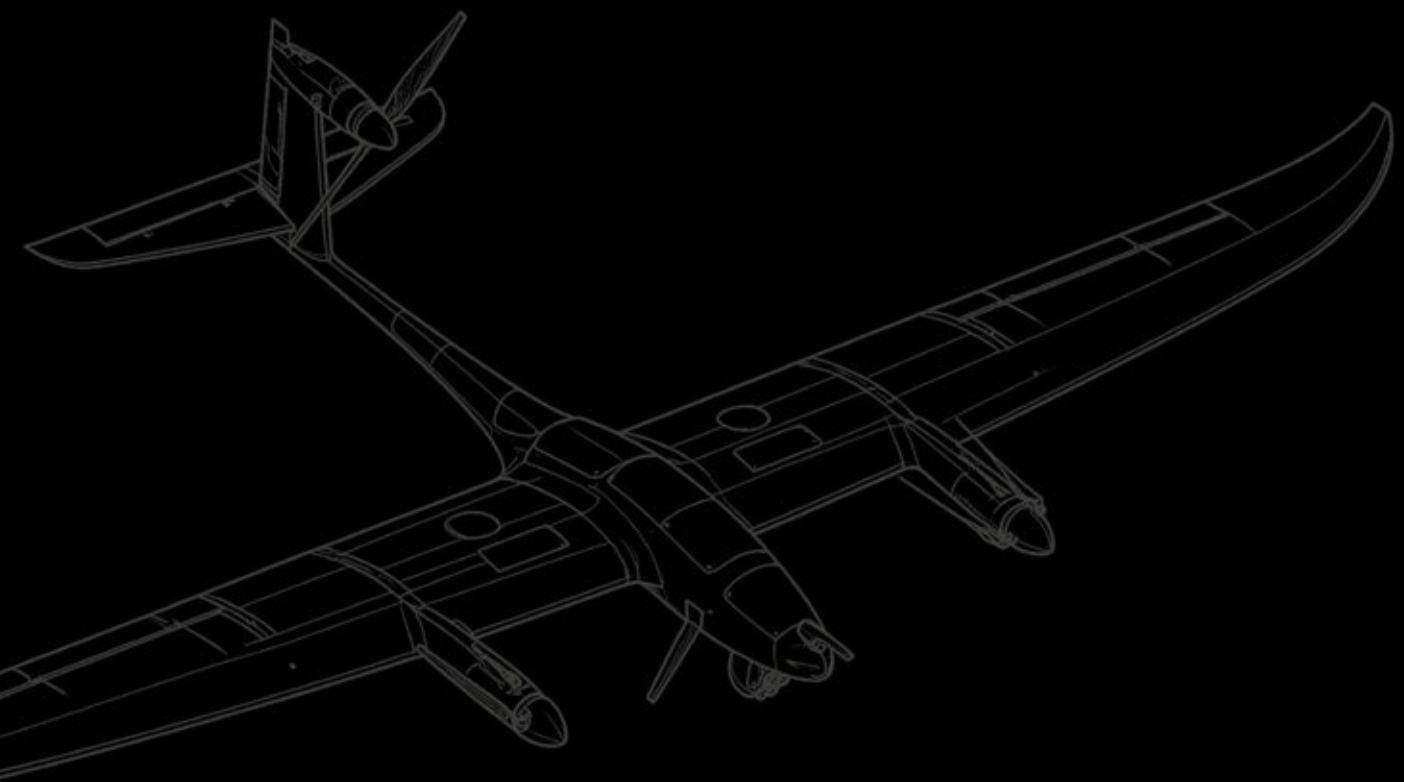

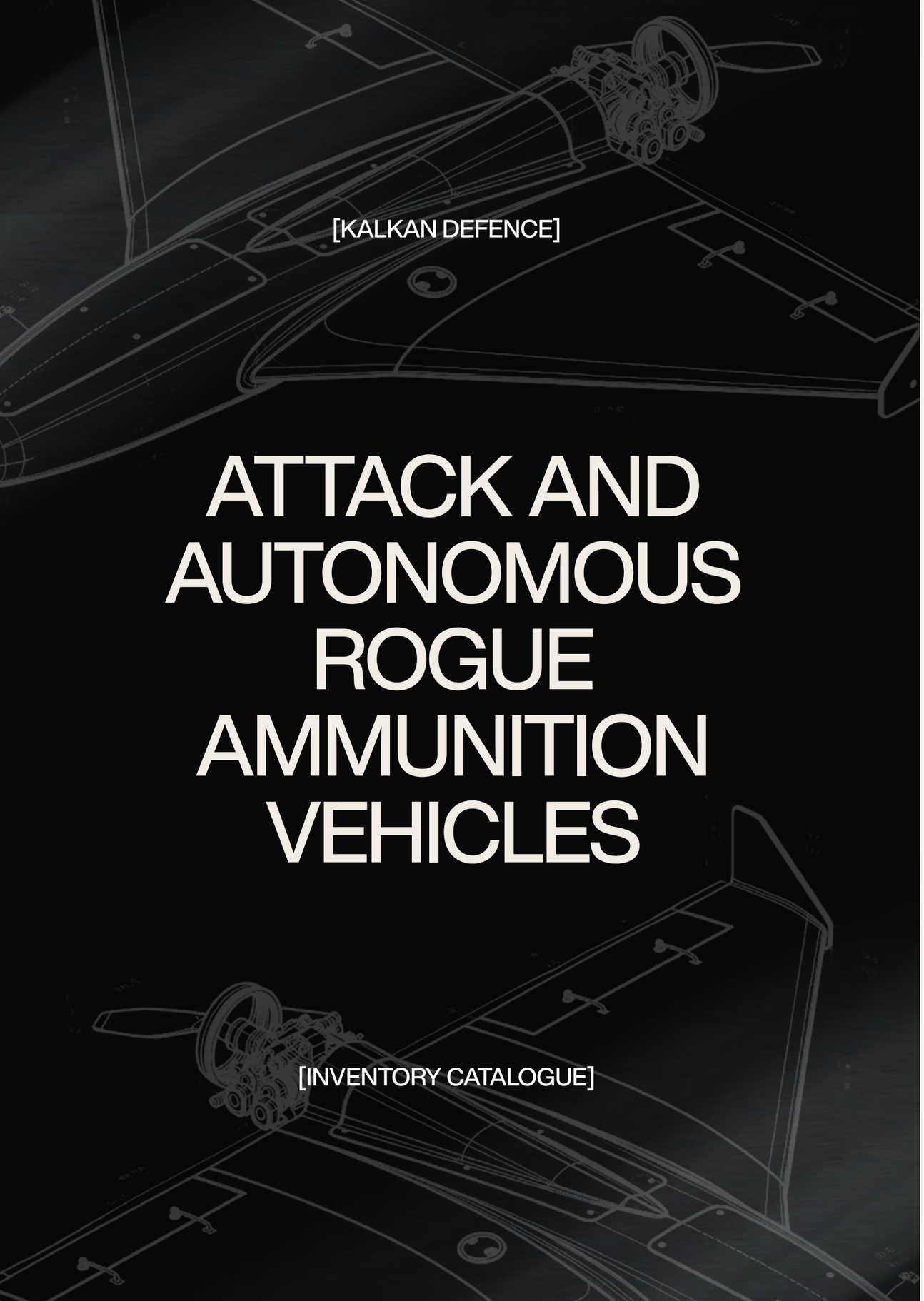

[KALKAN DEFENCE]

ATTACK AND AUTONOMOUS ROGUE AMMUNITION VEHICLES

[INVENTORY CATALOGUE]

Table of Contents

1.	About Us	4
2.	Tactical Attack and Strike UAV Systems	6
3.	Surveillance, Reconnaissance and Intelligence UAV Systems	28
4.	Multi-rotor and Munitions-carrying Systems	42
5.	Infantry Rifles	70
6.	Grenade Launchers	80
7.	Pump-action shotguns	90
8.	Light Machine Guns	96
9.	Tactical Pistols	104
10.	Ballistic Steel Vest	112
11.	Ballistic Steel Helmet	120
12.	Military Bags	126

About Us

Kalkan Defence Industry and Technologies Inc. was established in 2020; it is a global business and solutions partner operating on the international stage in the fields of the defence industry, advanced robotic technologies, industrial automation and strategic machinery and equipment. Since its inception, our company has closely monitored evolving global security dynamics and provides the high-tech equipment required by modern battlefields and critical facilities, delivered through a sustainable and reliable supply chain approach suited to the most challenging field conditions.



Global Competitiveness & A Transparent Approach to Operations

Kalkan Defence, which conducts its operations whilst adhering strictly to international standards, legal regulations and export/import legislation, has an extensive operational network in collaboration with strategic partners around the world. Thanks to the strong ecosystem we have established with leading manufacturers in our sector, we are constantly enhancing our competitive capacity and supply speed in global markets. We place the principle of full transparency at the heart of every stage of our business processes; safeguarding our customers' operational confidentiality,

We build long-term partnerships based on mutual trust, whilst safeguarding your confidentiality and interests to the highest degree. Kalkan Defence Industry and Technologies Inc., which is already integrated into the defence doctrines of the future, continues to be your strength in the field and your most reliable partner in your projects, thanks to its high-quality standards and uninterrupted logistical support.



Tactical Offensive and Attack UAV Systems

[Kalkan / 2.000 km Kamikaze Aircraft]

[Kalkan / Hawk68]

[Kalkan / Talay]

[Kalkan / Kovak]

[Kalkan / Karagun]

Kalkan 2.000 km Kamikaze Aircraft



Kalkan 2.000km Kamikaze Aircraft

The Kalkan 2,000 km Kamikaze Aircraft is an unmanned aerial vehicle system with a composite fuselage and a petrol engine, boasting an operational range of 2,000 km. The platform, which utilises a catapult launch mechanism, is capable of carrying a payload of up to 30 kg. With a maximum take-off weight of 190 kg, the system is designed for long-range operations, featuring the ability to operate in rainy weather conditions and a flight duration of 12 hours.

Feature	Value
Max. Takeoff Weight (MTOW)	*190 Kg*
Payload Capacity	*Max. 30 Kg*
Operational Range	*2.000 Km*
Flight Time	*12 Hours*
Cruise Speed / Max. Speed	*180 Km/h / 320 Km/h*
Max. Altitude	*5.000 Meters*
Dimensions	*Length: 3.5m - Wingspan: 2.5m*
Launch System	*Catapult*

[KALKAN]
[MODEL]

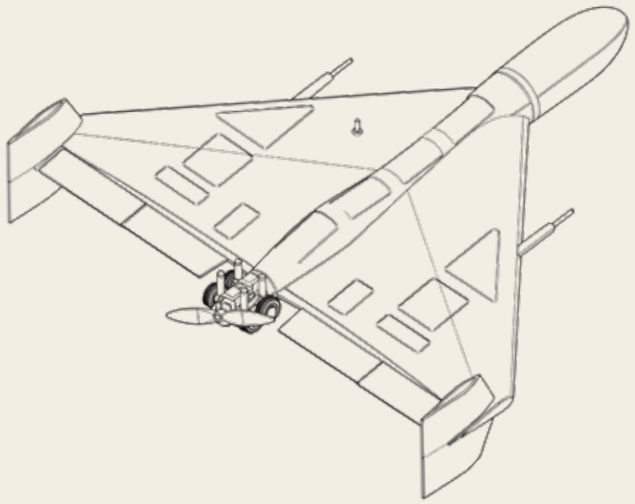

[2.000KM]

[KAMIKAZE]



Kalkan Hawk-68



Kalkan Hawk-68

The Kalkan Hawk-68 is a military loitering munition (loitering UAV) system that can be set up and operated by a single member of personnel. It is capable of swarm flight with up to 32 units. The system, which is capable of tracking moving targets, can be launched from land and sea platforms using a pneumatic or sling launcher.

Feature	Value
Max. Takeoff Weight (MTOW)	*48 kg*
Payload Capacity	*18 kg (Standard payloads)*
Data and Video Link Range	*30+ km (Optional 100 km)*
Flight Time	*180 Minutes (At cruise speed)*
Cruise Speed / Max. Speed	*40 m/s / 65 m/s*
Launch System	*Pneumatic / Sling*
Swarm Capacity	*Up to 32 Units*

[HAWK-68]
[MODEL]

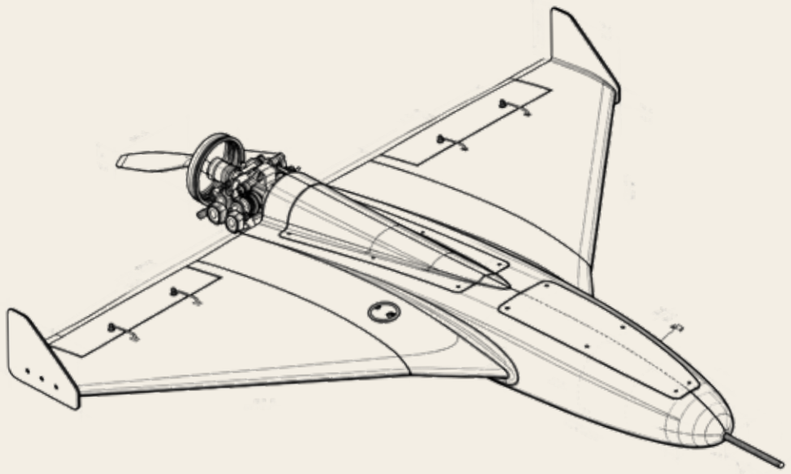

[UAV]

[KALKAN]



Kalkan Talay

Kalkan Talay

The Kalkan Talay is a multi-role maritime platform utilising Wing-in-Ground technology. It flies at altitudes ranging from 30 cm to 3 metres, offering a low radar signature. Featuring a foldable wing design, the system is configured for coastal and sea-skimming missions with a payload capacity of 30 kg.

Feature	Value
Max. Takeoff Weight (MTOW)	*65 kg*
Payload Capacity	*30 kg*
Flight Time	*Up to 3 hours*
Maximum Speed	*56 m/s (200km/s)*
Operational Altitude	*30 cm - 3 m (Ground Effect)*
Motor Type	*2x Electric Motor*
Operational Profile	*Water and Air Takeoff*

[TALAY]
[MODEL]

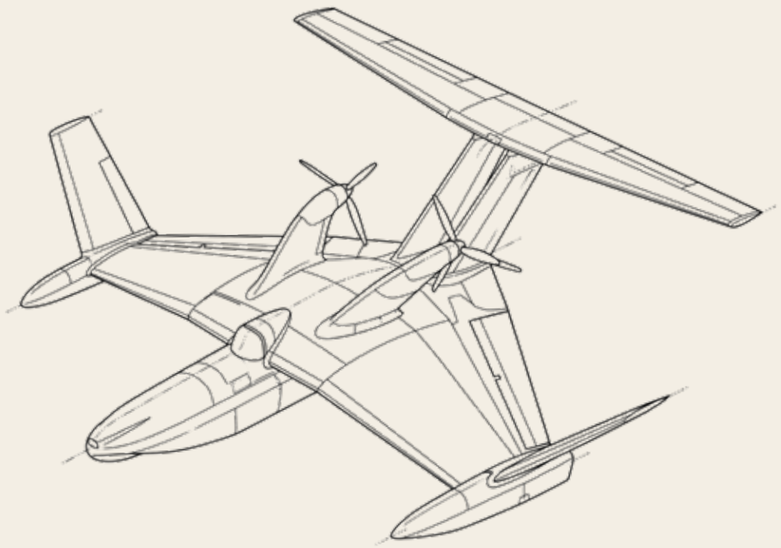

[WING-IN-GROUND]

[KALKAN]



Kalkan Kovak



Kalkan Kovak

Kalkan Kovak is an electrically powered loitering munition system capable of vertical take-off and landing (VTOL). The platform, which can be deployed in under five minutes, features AI-supported autonomous capabilities for target detection and classification, alongside operator-in-the-loop engagement options.

Feature	Value
Max. Takeoff Weight (MTOW)	*12 kg*
Payload Capacity	*3 kg*
Range (LOS)	*60 km*
Flight Time	*60 Minutes*
Cruise Speed / Max. Speed	*24 m/s (Economic) / 30 m/s*
Altitude Ceiling	*2,000 m (MSL)*
Takeoff System	*VTOL*

[KOVAK]
[MODEL]

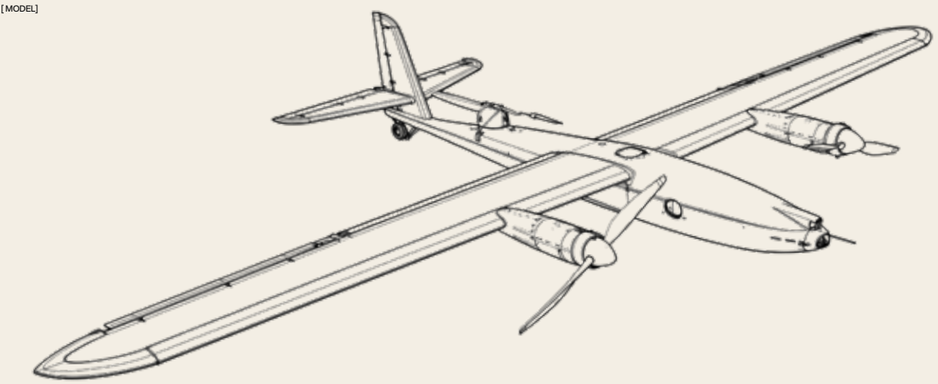

[VTOL]

[KALKAN]



Kalkan Karagun

Kalkan Karagun

Kalkan Karagun is a portable tactical UAV platform that can be launched directly by hand and requires no external equipment. The system, which has a maximum take-off weight of 10 kg, is equipped with a low-acoustic-signature propulsion engine. Equipped with automatic target-locking capability, it can carry out missions either under operator supervision or autonomously.

Feature	Value
Max. Takeoff Weight (MTOW)	*10 kg*
Payload Capacity	*2 kg*
Range (LOS)	*60 km*
Flight Time	*60 Minutes*
Cruise Speed / Max. Speed	*75 km/h / 110 km/h*
Takeoff System	*Hand Launch*
Targeting	*EO/IR Lock-on, AI-Assisted Recognition*

[KARAGUN]
[MODEL]

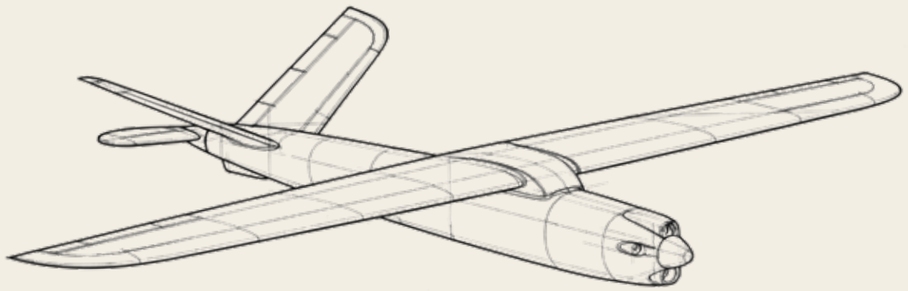

[IHA - KRGN]

[KALKAN]





Observation, Discovery & Intelligence UAV Systems

[Kalkan / UV100 VTOL]

[Kalkan / Zada V2]

[Kalkan / Toydu]

Kalkan
UV100 VTOL



Kalkan UV100 VTOL

The Kalkan UV100 is an industrial-grade ISR vehicle with vertical take-off and landing capabilities, powered by a petrol and electric (hybrid) engine. The composite platform, with a wingspan of 3.9 metres, has a take-off weight capacity of 35 kg. Its payload equipment includes a laser rangefinder and high-resolution thermal sensors.

Feature	Value
Max. Takeoff Weight (MTOW)	*35 kg*
Payload Capacity	*Max. 7 kg*
Flight Time	*Max. 10 Hours (with 5 kg payload)*
Data Transmission Range	*150 km*
Cruise Speed / Max. Speed	*65 km/h / 144 km/h*
Altitude Ceiling	*5,000 Meters*
Payload Equipment	*30x Optical Zoom, Laser Rangefinder, Thermal Camera*

[UV100]
[MODEL]

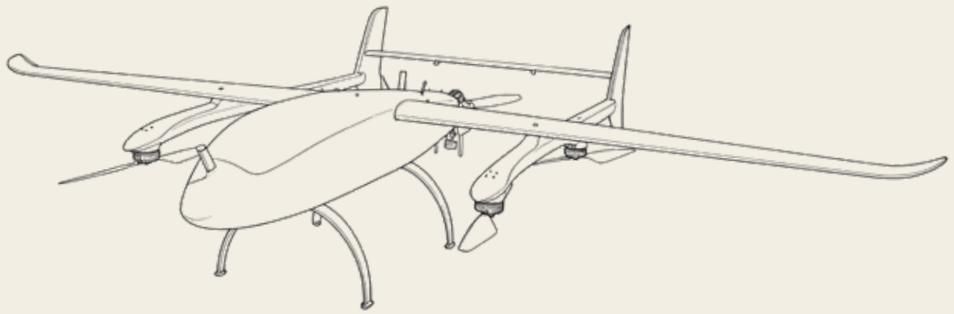

[ISR]

[KALKAN]



Kalkan Zada V2



Kalkan Zada V2

The Kalkan Zada V2 is an ISR platform that combines vertical take-off capability with fixed-wing flight, utilising three tilt-rotor mechanisms. Thanks to its backpack-carried equipment, it is ready for deployment in under five minutes. The system, which does not require a runway, has been developed for tactical situational awareness missions.

Feature	Value
Max. Takeoff Weight (MTOW)	*10 kg*
Payload Capacity	*Max. 1.2 kg*
Flight Time	*Up to 3 Hours*
Range (Datalink)	*50 km (LOS), 100 km (Telemetry)*
Takeoff System	*VTOL*
Altitude Ceiling	*3,000 m (MSL)*

[ZADA-V2]
[MODEL]

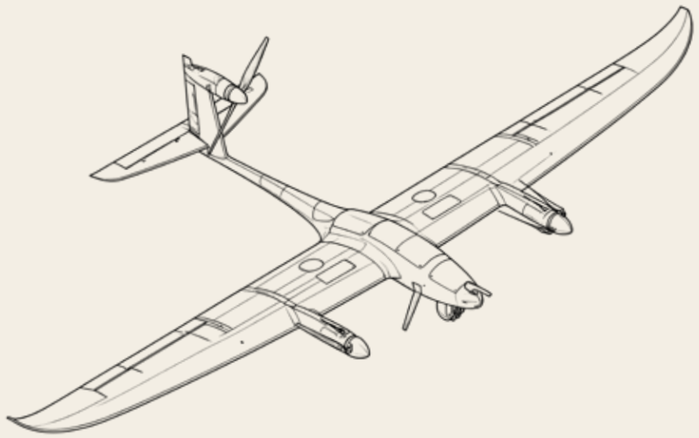

[ISR]

[KALKAN]



[2026]

Kalkan Toydu



Kalkan Toydu

Kalkan Toydu is an amphibious reconnaissance and surveillance UAV platform capable of taking off and landing directly on water. It is configured for maritime surveillance and underwater search operations. The platform supports the integration of payloads specific to maritime operations, such as a sonobuoy dispenser, an AIS receiver and a Magnetic Anomaly Detector (MAD).

Feature	Value
Max. Takeoff Weight (MTOW)	*25 kg*
Payload Capacity	*7 kg*
Flight Time	*3+ Hours*
Operational Altitude	*50 m - 3,000 m (MSL)*
Cruise Speed	*16 m/s*
Takeoff Environment	*Water, Runway, Catapult*
Mission Modules	*MAD, Sonobuoy, Maritime Surveillance Radar*

[TOYDU]
[MODEL]

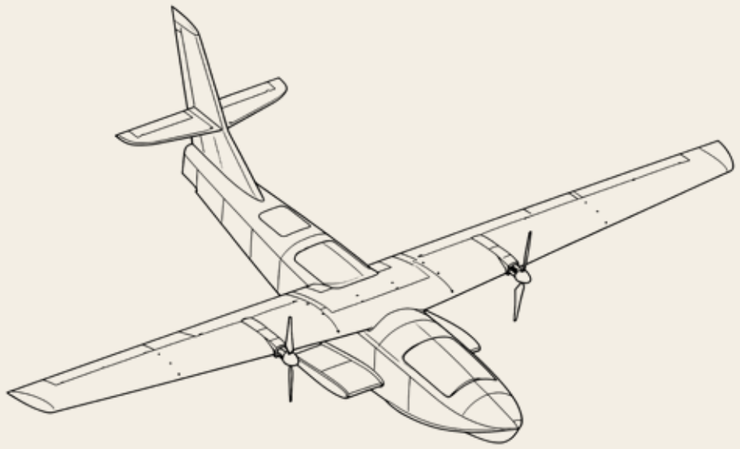

[MDS / R1-R2]

[KALKAN]





Multi-rotor and Munitions Support Structures

[Falcon AI Mini]
[Kalkan / Rampard]
[Kalkan / Skyhawk]
[Kalkan / TUAV-R02]

[Kalkan / ADG-M1]
[Kalkan / EW-CUAS/C2]

Falcon AI Mini



Falcon AI Mini

The Falcon AI Mini Drone is an autonomous micro-UAV platform featuring entirely proprietary ground control and swarm flight software. Using on-board artificial intelligence algorithms, it can detect humans, vehicles and various object classes, enabling it to autonomously track moving targets. The unmanned aerial platform’s hardware enables it to carry out general reconnaissance and surveillance missions, as well as navigation in environments without a GPS signal and operations in complete darkness through the integration of a thermal camera.

Feature	Value
Max. Takeoff Weight (MTOW)	*23 kg*
Payload Capacity	*Max. 10 kg*
Flight Time	*30 Minutes (with 8 kg payload)*
Operational Range	*15 km*
Maximum Speed	*60 km/s*
Ammunition Support	*2x60mm / 1x82mm Mortar or 6x40mm Rocket*

[FALCON AI MINI]
[MODEL]

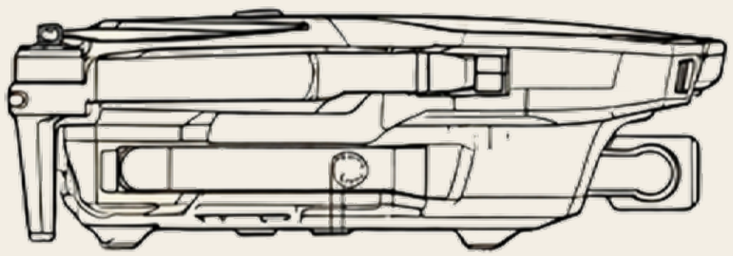



Kalkan Rampard (MDS-R1/R2)



Kalkan Rampard (MDS-R1/R2)

Kalkan Rampard is a quad-rotor UAV platform equipped with its own mission planning software. It is capable of tracking moving targets using image processing algorithms. The unmanned aerial platform's hardware provides a payload capacity that enables the integration of 60mm/82mm mortars and 40mm rockets, in addition to general-purpose missions.

Feature	Value
Max. Takeoff Weight (MTOW)	*23 kg*
Payload Capacity	*Max. 10 kg*
Flight Time	*30 Minutes (with 8 kg payload)*
Operational Range	*15 km*
Maximum Speed	*60 km/s*
Ammunition Support	*2x60mm / 1x82mm Mortar or 6x40mm Rocket*

[RAMPARD]
[MODEL]

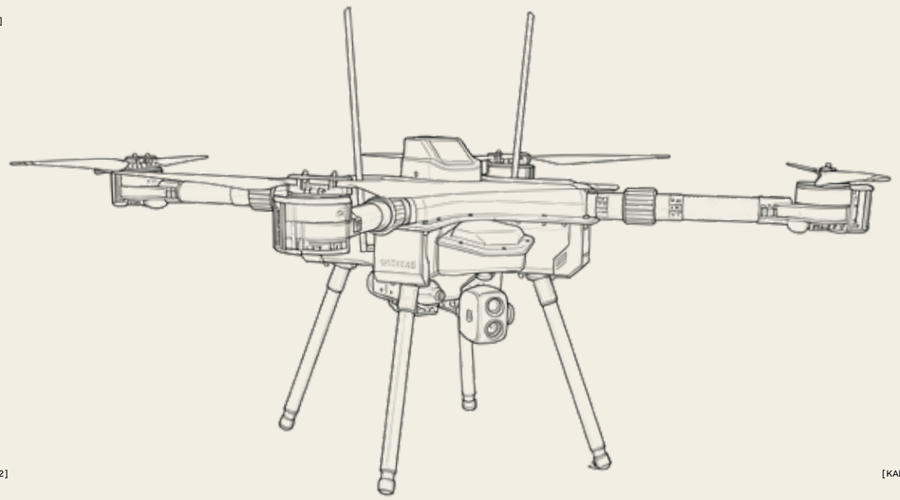

[MDS / R1-R2]

[KALKAN]



Kalkan Skyhawk



Kalkan Skyhawk

The Kalkan Skyhawk Drone is a multi-rotor platform designed to meet heavy-lift requirements, featuring an aviation-grade aluminium-reinforced carbon fibre airframe. It is capable of transport, communication relay and reconnaissance functions. The system’s specialised mortar version is configured with three 81mm munition release mechanisms. The unit features integrated CRPA antennae.

Feature	Value
Max. Takeoff Weight (MTOW)	*24 kg*
Payload Capacity	*10 kg*
Flight Time (Loaded / Unloaded)	*60 Minutes (Camera) / 70 Minutes (Empty)*
Control Range	*15 - 30 km (Line of Sight)*
Maximum Flight Speed	*21 m/s*
Body Structure	*Carbon Fiber + 7075 Aluminum*
Payload Equipment	*Mortar Drop System (3x81mm)*

[SKYHAWK]
[MODEL]

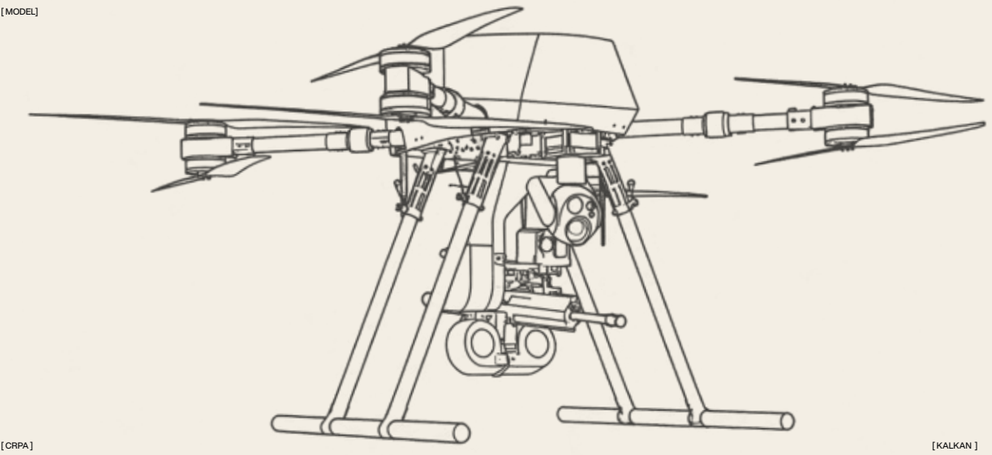

[CRPA]

[KALKAN]



Kalkan / TUAV-R02

Wired (Tethered) Station Systems



Kalkan / TUAV-R02

Wired (Tethered) Station Systems

The Kalkan TUAV-R02 is a multi-rotor surveillance system connected to mobile or fixed ground stations via a physical cable (tether). Thanks to continuous power transmission, it can remain airborne without any time restrictions. As communication is provided via a fibre-optic network, it is immune to jamming and can autonomously track the main station from the air at speeds of up to 60 km/h.

Feature	Value
Operational Altitude	*Max. 150 m*
Payload Capacity	*10 kg*
Flight Time	*Continuous (Cable-fed)*
Moving Platform Tracking	*Autonomous (Max. 60 km/s)*
Data Transmission	*Fiber Ethernet (1 Gbps) or Wifi*
Setup Time	*<2 Minutes*
Payload Options	*SIGINT, Relay, EO/IR*

[TUAV-R02]
[MODEL]

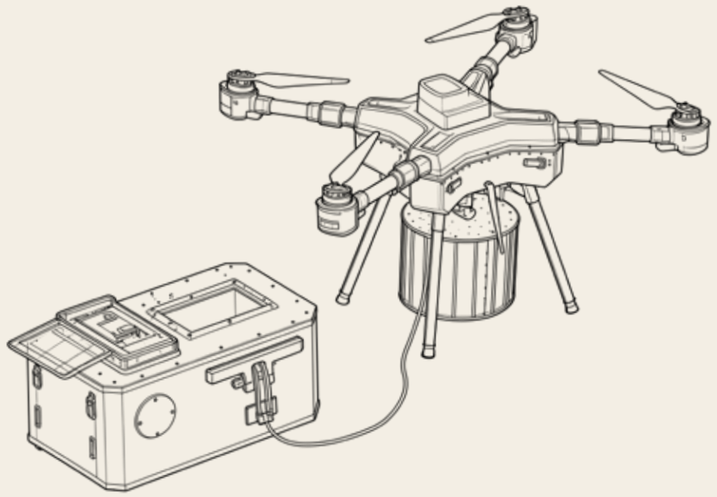

[TETHER]

[KALKAN]



Kalkan / ADG-M1 Anti-Drone Systems

Electronic Warfare and Anti-Drone Systems



Kalkan / ADG-M1 Anti-Drone Systems

Electronic Warfare and Anti-Drone Systems

The Kalkan ADG-M1 is a portable electronic warfare platform that applies directional jamming against unmanned aerial vehicles. Its integrated antenna system is designed to transmit across four different standard frequency bands. The device, featuring a lithium-ion battery architecture, provides power for over 45 minutes on a single charge and can neutralise more than 30 drones.

Feature	Value
System Type	*Directional Anti-Drone Gun*
Standard Frequency Bands	*900 MHz, 1.2 GHz, 2.4 GHz, 5.8 GHz*
Antenna Type	*Integrated Directional Antenna*
Battery Operating Time	*45+ Minutes*
Weight	*~4 kg (Varies by number of frequencies)*
Form Factor	*Tactical, Portable*

[ADG-M1]
[MODEL]

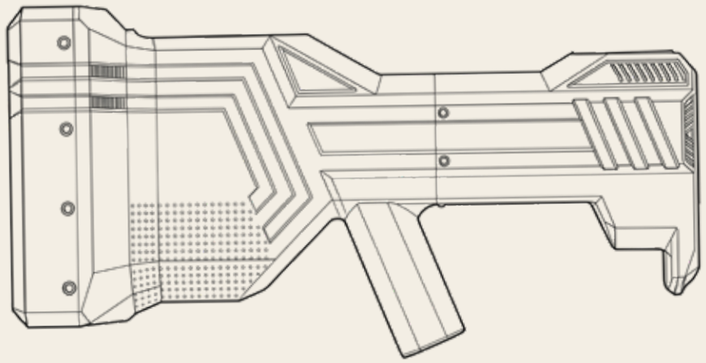

[JAMMING]

[KALKAN]



Kalkan EW-CUAS/C2 Integrated Defence

Kalkan EW-CUAS/C2 Integrated Defence

Kalkan EW-CUAS/C2 is a multi-layered, integrated and autonomous area defence system that combines electronic warfare (jamming), radar detection, electro-optical/infrared (EO/IR) surveillance and command and control (C2) software. It has been developed to protect fixed bases and critical infrastructure against Unmanned Aerial Vehicle (UAV) threats. Whilst detecting and tracking targets via radar fusion, it neutralises targets by applying wideband electronic jamming from 400 MHz to 8,000 MHz and manages the entire process continuously, 24 hours a day, 7 days a week, via a common operational command interface.

Feature	Value
System Modules	Electronic Warfare (EW), Anti-Drone (CUAS: Radar + Camera), Command and Control (C2) Software
Total RF Output Power	1000 W
Output per Channel / Antenna Gain	53 dBm EIRP / Omnidirectional > 4 dBi
Effective Jamming Range	Up to 10 km for 430/860 MHz; Up to 5 km for L1/L2-L5, 1400, 2400, 5200, 5800, 6700 MHz
Radar Detection Ranges	Pedestrian: > 12 km, Small Vehicle: > 25 km, Large Vehicle: > 40 km (X-band)
Target Speed and Radar Update Rate	Phased Array: 0.5-100 m/s (1 sec), Mechanical Scan: 1-60 m/s (4 sec)
Camera Day Detection / Tracking	>5,000 m Detection, 4,000 m Tracking (for 0.3m x 0.3m UAV target)
Camera Thermal Detection / Tracking	>2,000 m Detection, > 1,500 m Tracking
Operating Temperature / Power Supply	-15°C to +65°C / 220 VAC - 50 Hz

[EW-CUAS/C2]
[MODEL]

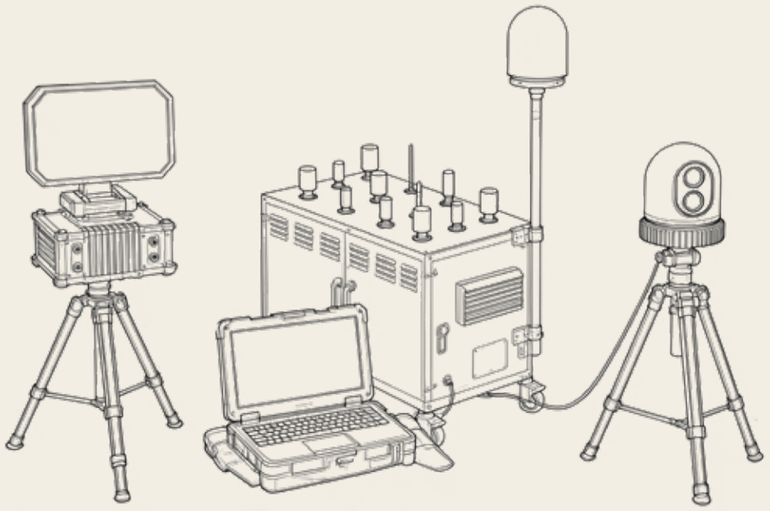

[C2]

[KALKAN]



Electro-optical / Infrared detection

CUAS MODULE | MULTI-SENSOR INTEGRATION AND DRONE DETECTION PERFORMANCE

1. Multi-Sensor Integration

A high-resolution visible-light camera, an uncooled thermal imaging module and multi-spectral detection capabilities, supported by intelligent target detection and tracking software.

2. Visible Light

For a UAV target measuring 0.3 m by 0.3 m

- Detection: > 5,000 m
- Tracking: > 4,000 m
- Definition: > 3,000 m

3. Thermal Imaging

Thermal detection and tracking performance

- Measurement: 2,000 m
- Range: 1,500 m
- Specification: 1,000 m

[EW-CUAS/C2]
[MODEL]

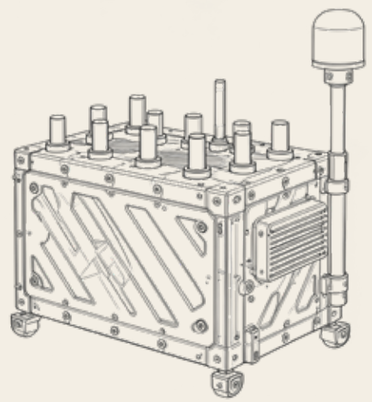

EW

Your sensitive corporate and strategic data without authorisation
Protection against unauthorised access using military-grade encryption.

- Wideband RF mixing architecture
- Protection of fixed installations against UAV threats
- Low-noise, high-reliability operation
- Designed for 24/7 uninterrupted operation

[EW-CUAS/C2]
[MODEL]

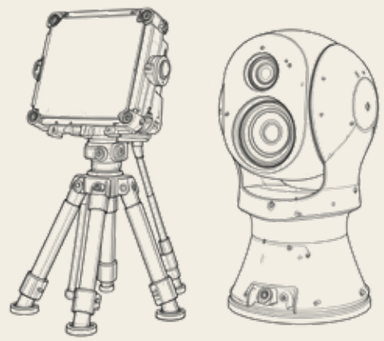

CUAS

Anti-Drone (UAV Defence) / Radar + Camera

- Radar + EO/IR (Electro-Optical/Infrared) sensor
- Early warning, detection and target tracking
- Situational awareness in all weather conditions
- Advanced classification and verification capabilities

[EW-CUAS/C2]
[MODEL]

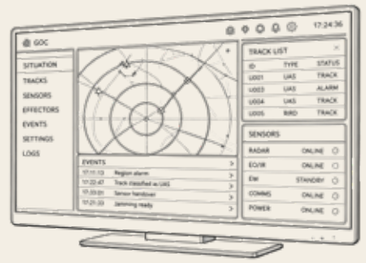

C2

Command and Control Software

- Unified command interface
- Real-time alerts and incident management
- Sensor and effector integration
- Common operational table for operators

Assult Rifles

[KLK-P556]
[KLK-AKM 47]
[KLK-S9+]
[KLK-P762]

KLK- P556

5.56 × 45 mm NATO Rifle

[KLK-P556]
[MODEL]



[5.56]

[KALKAN]

Short-stroke gas piston:
To reduce pollution and global warming.

Ergonomic grip and buttplate:
For superior comfort and control.

Free-floating M-LOK handguard:
For the integration of modular accessories.

Five barrel options:
From 190 mm to 406 mm.

Lightweight yet sturdy construction:
For top-performing readiness.

The KLK - P556 is a modern 5.56×45 mm NATO platform designed to combine reliability, modularity and mission adaptability within a lightweight yet robust design.

Feature	Value
Caliber	5.56 × 45 mm NATO
Weight (18.11 inch barrel)	3.25 kg (~ 7.16 lb)
Total Length	Between 870 mm and 960 mm, depending on stock and barrel
Barrel Options	190 mm (7.5 inch), 266 mm (10.5 inch), 305 mm (12 inch), 368 mm (14.5 inch), 406 mm (16 inch)
Muzzle Device	A2 type or 3-prong A2 interface
Effective Range	500 m
Gas System	Short-stroke gas piston
Rate of Fire	750–950 rounds/min (rpm)
Operating Principle	Gas operated, rotating bolt head
Stock	5-position telescopic stock with cheek rest
Receiver	Upper: 6000 series aluminum; Lower: 7000 series aluminum
Handguard	Free-floating M-LOK; MIL-STD 1913 interface
Sights	Mechanical backup
Magazine	30-round STANAG box type, composite or aluminum
Trigger Pull Weight	35–45 N (approx. 7.9–10.1 lbf)

KLK- AKM 47

7.62×39 mm Rifle

The KLK-AKM 47 is a classic 7.62×39 mm platform that combines legendary reliability, ease of use and durability in harsh field conditions within a robust design.

[AKM-47]
[MODEL]



[7.62]

[KALKAN]

Feature	Value
Caliber	7.62 × 39 mm
Weight	3,700 g empty magazine
Total Length	980 mm
Height	258 mm
Rate of Fire	650 rounds/min (rpm)
Effective Range	400 m
Barrel Length	410 mm (16.1 in)
Rifling Twist Rate	1:9.5", 4 grooves, right-hand twist (RH)
Operating Principle	Gas operated, rotating bolt head
Stock	Fixed wooden, Synthetic stock
Sights	Adjustable mechanical
Magazine	30-round (G3 type)

Legendary Reliability:
It withstands mud, sand and neglect with minimal maintenance.

High-Speed Performance:
Muzzle velocity of 715 m/s (approximately 2,345 ft/s) for flat trajectories. .

Sturdy Barrel:
Structures made from 4140 steel offer a long service life even under intense fire.

User-friendly:
A fixed wooden buttstock for easy field disassembly and consistent ergonomics.

Universal Magazines:
It is compatible with all standard 30-round 7.62×39 mm AK magazines.

KLK- S9+

9x19mm Rifle

[S9+]
[MODEL]



[7.62]

[KALKAN]

Dual-Mode Firing:
Semi-automatic for maximum adaptability, and fully automatic at 700 rpm.

Closed-Bolt Operation:
It ensures consistent accuracy on the first shot and more reliable handling under pressure.

Ambidextrous Controls:
A fixed (non-moving during firing) cocking lever and magazine release lever at the front, accessible from both sides.

Controllable Recoil:
Robust delayed-blowback system
It keeps the 9 mm in check during rapid bursts of fire.

Compact and Sturdy:
Aerospace-grade aluminium fuselages combine low weight with high strength.

The KLK-S9+ offers a compact and robust design capable of withstanding harsh conditions, whilst maintaining its light weight thanks to its aerospace-grade aluminium body. The delayed blowback system, combined with the closed-bolt mechanism, maximises the weapon's first-shot accuracy and ensures that recoil is easily controlled during rapid successive firing. Adaptable to a variety of scenarios with its semi-automatic and fully automatic firing modes (700 rounds per minute), the firearm offers the shooter ease of use thanks to its ergonomic controls (cocking lever and magazine release) designed for two-handed operation. It caters to a wide range of users with both its fully automatic military version and its semi-automatic model, which complies with civilian legislation.

Feature	Value
Type / Caliber	Fully Automatic, Rifled Infantry Rifle / 9x19 mm NATO
Magazine Capacity	32 rounds
Total Length	842 mm
Width / Height	W. 64 mm / H. 195 mm
Barrel Length	400 mm
Barrel Material	Melonite coated 4140 steel
Weight	3,600 g (7.93 lb) empty magazine
Lower Receiver / Upper Receiver	7075 series aluminum / 6082 series aluminum
Effective Range	350 m
Operating Principle	Lever-delayed blowback
Muzzle Velocity	650 m/s
Accessory Rail	MIL-STD 1913 Picatinny
Trigger Pull Weight	30-35 N (approx. 6.7-7.9 lbf)

KLK- P762

7.62×51 mm Rifle

[KLK-P762]
[MODEL]



[7.62]

[KALKAN]

The KLK-P762 boasts legendary durability, capable of withstanding mud, sand and neglect whilst requiring minimal maintenance. It delivers high ballistic performance with a muzzle velocity of 715 m/s to achieve flat trajectories, whilst its barrel, forged from 4140 steel, ensures long-lasting service even under heavy fire. With its simple field disassembly and fixed wooden stock, it provides the shooter with consistent ergonomics and ease of use. Furthermore, it operates seamlessly with all standard 30-round 7.62×39 mm AK magazines on the market, offering operational flexibility and universal compatibility.

Legendary Reliability:
It withstands mud, sand and neglect with minimal maintenance.

High-Speed Performance:
Muzzle velocity of 715 m/s (approximately 2,345 ft/s) for flat trajectories.

Sturdy Barrel:
Structures made from 4140 steel offer a long service life even under intense fire.

User-friendly:
A fixed wooden buttstock for easy field disassembly and consistent ergonomics.

Universal Magazines:
It is compatible with all standard 30-round 7.62×39 mm AK magazines.

Feature	Value
Caliber	7.62 × 51 mm NATO
Weight (16" barrel)	3.50 kg (approx. 7.72 lb)
Total Length / Height	910–980 mm (depending on stock) / 258 mm
Rate of Fire	800–1000 rounds/min (rpm)
Operating Principle	Gas operated, direct impingement
Stock	Telescopic
Receiver: Upper (and Lower)	6000 series aluminum / Lower: 7000 series aluminum
Barrel Options	406 mm (16 inch), 457 mm (18 inch), 508 mm (20 inch)
Muzzle Velocity	850 m/s (approx. 2789 ft/s)
Effective Range	600 m (approx. 656 yd)
Accessory Rail	MIL-STD 1913 Picatinny
Magazine	20 rounds



Granade Launchers

[KLK-B40]
[KLK-B40 S]
[KLK-B40 G]
[KLK-TB40]

KLK-B40

37/38/40 mm Grenade Launcher

[KLK-B40]
[MODEL]



[37-38-40]

[KALKAN]

High-Capacity Drum:

Four shots before reloading — ideal for breaking down doors or crowd control.

Pump and Index (Rotation) Suitable for Two-Handed Use:

Effortless use for both left- and right-handed people

Variable Rise:

A ladder-type sight calibrated to three different ranges for quick adjustments.

Tactical Rail:

Option to fit a torch or sighting devices to the drum.

Robust Structure:

A heavy-duty, corrosion-resistant coating for harsh environments.

The KLK-B40 is designed with a robust, heavy-duty, corrosion-resistant construction to withstand harsh environmental conditions. Its high-capacity drum, capable of firing four consecutive rounds without the need for reloading, makes it ideal for use in door-breaching operations and crowd control. The ambidextrous pump mechanism, designed for both right- and left-handed operators, ensures seamless operational flexibility. Featuring a ladder-type sight calibrated for three ranges to ensure rapid target acquisition, the weapon also allows for the integration of a torch or optical devices via the tactical rail mounted on the magazine.

Feature	Value
Caliber	40 mm rifled – 6 grooves
Weight	3.4 kg (approx. 7.4957 lb)
Total Length	500 mm (stock folded) / 850 mm (stock extended)
Height / Width	H. 156 mm (approx. 6.14 in) / W. 134 mm (approx. 5.28 in)
Lower & Upper Receiver	Lower: 7063 series aluminum / Upper: 6063 series aluminum
Barrel Length	203 mm (8 inches)
Effective Range	150 m - 375 m (approx. 164 - 410 yd)
Cylinder Capacity	4 rounds (manual rotating cylinder)
Operating Principle	Pump-action rotating cylinder
Stock	2-position adjustable telescopic
Sights	Mechanical ladder type (45°/60°/75°)
Trigger Pull Weight	~ 4-5 kg (approx. 8.8-11.0 lbf)

KLK-B40 S

37/38/40 mm Single-Shot Grenade Launcher

[KLK-B40 S]
[MODEL]



[37-38-40]

[KALKAN]

A Two-Way Approach:

A barrel mechanism (tail) that opens to the right or left for user flexibility.

Compact and Lightweight:

With its slim profile, it is ideal for use on its own or mounted under the barrel.

Rapid Engagement (Entering Combat):

A double-action firing mechanism with rapid reloading capability

Adjustable Sight:

A leaf-type sight calibrated for standard 40 mm ammunition trajectories.

Accessory Integration:

An internal Picatinny rail for optics or tactical accessories.

The KLK-B40 S is a versatile platform which, thanks to its compact and lightweight design, can be used both on its own and integrated under the barrel of an infantry rifle. The barrel design, which allows the shooter to aim to the right or left, combined with a double-action trigger mechanism and rapid reloading capability, ensures rapid and flexible use in the field. With a foldable polymer stock specially developed for mobile operations, a leaf sight suitable for standard 40 mm rounds and an internal Picatinny rail allowing the attachment of optical devices, it is fully prepared for any tactical mission.

Feature	Value
Caliber	40 × 46 mm
Operating Principle	Double action, side-opening barrel mechanism, single shot
Effective Range	100–400 m (approx. 109–437 yd)
Barrel Length	245 mm (9.7 inches)
Total Length	323 mm (12.7 inches)
Length with Stock (Extended)	650 mm (25.6 inches)
Length with Stock (Folded)	575 mm (22.6 inches)
Weight (Empty)	1.67 kg (approx. 3.68 lb)
Weight with Adapter and Stock	2.35 kg (approx. 5.2 lb)
Mounting	Compatible with MIL-STD-1913 Picatinny rail
Sights	Fixed leaf sight adjustable to 100 / 200 / 300 / 400 m

KLK-B40G

37/38/40 mm Anti-Riot Launcher

[KLK-B40 G]
[MODEL]



[37-38-40]

[KALKAN]

The KLK-B40 G is designed with a robust, heavy-duty, corrosion-resistant construction to withstand harsh environmental conditions. Its high-capacity drum, capable of firing four consecutive rounds without the need for reloading, makes it ideal for use in door-breaching operations and crowd control. The ambidextrous pump mechanism, designed for both right- and left-handed operators, ensures seamless operational flexibility. Featuring a ladder-type sight calibrated for three ranges to ensure rapid target acquisition, the weapon also allows for the integration of a torch or optical devices via the tactical rail mounted on the magazine.

Feature	Value
Caliber	37-38-40 mm rifled – 4 grooves
Weight	3,500 g (approx. 7.72 lb)
Total Length	500 mm (stock folded) / 850 mm (stock extended)
Height / Width	H. 156 mm (approx. 6.14 in) / W. 134 mm (approx. 5.28 in)
Lower & Upper Receiver	Lower: 7063 series aluminum / Upper: 6063 series aluminum
Barrel Length	203 mm (8 inches)
Effective Range	50 m - 150 m (approx. 54.68 - 164.04 yd)
Cylinder Capacity	4 rounds (manual rotating cylinder)
Operating Principle	Pump-action rotating cylinder
Stock	2-position adjustable telescopic
Sights	Mechanical ladder type (45°/60°/75°)
Trigger Pull Weight	~ 4-5 kg (approx. 8.8-11.0 lbf)

High-Capacity Drum:

Four shots before reloading — ideal for breaking down doors or crowd control.

Pump and Index (Rotation) Suitable for Two-Handed Use:

Effortless use for both left- and right-handed people

Variable Rise:

A ladder-type sight calibrated to three different ranges for quick adjustments.

Ray’s Tactics:

Option to fit a torch or sighting devices to the drum.

Solid Construction:

A heavy-duty, corrosion-resistant coating for harsh environments.

KLK-TB40

37/38/40 mm Anti-Riot Launcher

[KLK-TB40]
[MODEL]



[37-38-40]

[KALKAN]

The KLK-TB40 is a lightweight and robust platform specifically designed for crowd control and field operations. Manufactured with a 7075 aluminium body and a 4140 steel barrel, the weapon is reinforced with a hard chrome plating to ensure long-lasting use in demanding conditions. Optimised for non-lethal interventions, the TB40 fires 37/38mm and 40mm calibre tear gas, smoke, rubber and sound grenades with ease, whilst strictly prohibiting the use of high-explosive (HE) ammunition for safety reasons.

Feature	Value
Caliber	37/38 and 40 mm
Barrel Length	305 mm (12")
Total Length (Stock Extended)	735 mm (28.9")
Total Length (Stock Folded)	660 mm (26")
Weight (Empty)	2200 g
Operating System	Single Break Loading
Trigger	Double Action
Safety	Ambidextrous Safety
Sight System	80/100/130 m
Firing Mode	Single Shot
Effective Range	100 m
Trigger Pull Weight	45 Newton
Stock	Easily Removable - Telescopic Stock
Rate of Fire	5-6 Rounds / Minute
Barrel Type	Smooth Barrel
Barrel and Receiver Material	Barrel: 4140 Steel / Receiver: 7075 Aluminum
Ammunition Type	37/38mm & 40mm Less Lethal Cartridges
Sling	NATO QD Tactical
Ammunition	40/38/37 mm CS gas, OC gas, smoke ammunition

Compatibility with Less-Lethal Ammunition:
It supports 37/38 mm and 40 mm tear gas, smoke, rubber (plastic) and flashbang rounds. The use of high-explosive (HE) rounds is strictly prohibited.

Reliable Double-Action System:
A single-break-open barrel mechanism featuring a two-handed trigger safety and rapid reloading capability.

Modular Tactical Design:
Picatinny rails, a removable telescopic stock and a folding foregrip for versatile use

Optimised for Field Operations:
Effective range up to 100 m, 5–6 rounds per minute, adjustable mechanical sights and gas diversion design.



Shotguns

[KLK-TACSX T1]
[KLK-TACSX T3]
[KLK-SG114]

KLK-TACSX T1

Tactical Pump-Action Shotgun

[KLK-TACSX T1]
[MODEL]



[KALKAN]

Feature	Value
Operating Principle (System)	Semi-Automatic (Gas Piston)
Caliber / Chamber	12 Gauge / 76mm (Smoothbore Barrel)
Total Length	100 cm with 47 cm Barrel
Magazine Capacity	5 and 10 round box magazines
Barrel Options	33 cm / 40 cm / 47 cm
Stock Coating Options	Synthetic / Camouflage / Cerakote / Wood
Receiver Surface (Material)	Steel
Chokes	Fixed cylinder choke with external threads on the barrel
Average Weight	3.30 kg
Trigger Pull Length	340 mm

KLK-TACSX T3

Tactical Pump-Action Shotgun

[KLK-TACSX T3]
[MODEL]



[KALKAN]

Feature	Value
Operating Principle (System)	Hybrid Semi-Automatic (Kinetic and Short Gas Piston)
Caliber / Chamber	12 Gauge / 76mm (Smoothbore Barrel)
Total Length	102 cm with 47 cm Barrel
Magazine Capacity	5+1 / 7+1
Barrel Options	47 cm
Stock Coating (Surface) Options	Synthetic / Camouflage
Receiver Surface (Material)	Aluminum Alloy
Chokes	Fixed Modified Choke
Average Weight	3.30 kg

KLK-SG 114

Semi-Automatic Pump-Action Shotgun

[KLK-TACSX T1]
[MODEL]



[KALKAN]

Safe Gas Operation:

Smooth mechanism operation and reduced recoil thanks to the self-regulating gas system.

Multiple Shock Resilience:

It can be adapted for various applications (hunting, sport and security).

Robust Construction:

A high-strength aluminium body paired with a sturdy steel butt-plate for maximum durability.

Versatile Capabilities:

Two different magazine configurations to meet operational requirements.

The KLK-SG 114 is a versatile platform that offers maximum durability in demanding conditions, thanks to its high-strength aluminium receiver and robust steel buttplate. Thanks to its self-regulating gas system, it provides the shooter with low recoil and a seamless, smooth firing experience. With multiple recoil options, it can be easily adapted to different applications such as hunting, sport shooting or security duties. Offering flexible usage with magazine capacities of 4+1 or 9+1 depending on operational requirements, the firearm features a professional matt black finish specially designed for tactical operations and field conditions.

Feature	Value
System	Gas operated, semi-automatic
Caliber (Diameter)	12 GA (Gauge)
Magazine Capacity	4+1 / 9+1
Barrel Length Options	470 mm / 510 mm
Choke Type	Multi-choke system
Receiver Material	Aluminum alloy
Stock Type	Steel fixed stock
Coating / Color	Black
Weight (Average)	3,300 g (approx. 7.27 lb)

Light Machine Guns

[KLK-S9]
[KLK-S9 G]
[KLK-762 PL]

KLK-S9

9×19 mm Light Machine Gun



Dual-Mode Firing:
Semi-automatic for maximum adaptability, and fully automatic at a rate of 700 rounds per minute.

Closed-Bolt Operation:
It ensures consistent accuracy on the first shot and more reliable handling under pressure.

Ambidextrous Controls:
A fixed (non-moving during firing) cocking lever and magazine release lever at the front, accessible from both sides.

Controllable Recoil:
A robust delayed-blowback system keeps the 9 mm in check during rapid successive firing.

Compact and Sturdy:
Aerospace-grade aluminium fuselages combine low weight with high strength.

The KLK-S9 features a compact and robust design that offers high durability whilst maintaining its light weight, thanks to its aerospace-grade aluminium body. The reliable closed-bolt operating principle, combined with a delayed blowback system, maximises the weapon's first-shot accuracy and ensures that recoil is easily controlled during rapid successive firing. Adaptable to different operational requirements with its semi-automatic and fully automatic modes—capable of reaching a rate of fire of 700 rounds per minute—the platform offers flexible use thanks to its ambidextrous ergonomic controls (cocking lever and magazine release) designed for both right- and left-handed shooters. Furthermore, it caters to different user profiles with both a fully automatic military model and a semi-automatic version suitable for civilian use.

Feature	Value
Caliber	9 × 19 mm
Weight (6.5" barrel)	2,450 g (approx. 5.40 lb) (Empty)
Total Length	420 mm (approx. 16.54 in)
Total Dimensions	420 × 64 × 260 mm (approx. 16.54 × 2.52 × 10.24 in)
Barrel Options	165 mm (6.5 inches), 216 mm (8.5 inches), 254 mm (10 inches)
Rate of Fire	700 rounds/min (rpm)
Operating Principle	Delayed blowback
Stock	Aluminum (foldable or telescopic)
Receiver	Upper: 6082 series aluminum; Lower: 7075 series aluminum
Magazine	32 rounds (Colt style)
Trigger Pull Weight	NATO STANAG 4694 Picatinny
Effective Range	150 m (approx. 164 yd)
Muzzle Velocity	410 m/s (approx. 1345 ft/s)

KLK-S9 G

9×19 mm Light Machine Gun

[KLK-S9 G]
[MODEL]



[9X19MM]

[KALKAN]

KLK-S9 G With a total length of just 355 mm, this compact platform offers superior manoeuvrability, particularly in confined spaces and for in-vehicle operations. With its aerospace-grade aluminium receiver and 4140 steel barrel, it ensures high durability in demanding operational conditions, whilst its simple recoil mechanism and Glock-style magazine release provide the shooter with a reliable and intuitive handling experience. Its lightweight slide and balanced recoil system minimise muzzle rise at high rates of fire, facilitating rapid successive shots at the target. The full-length STANAG Picatinny rail allows for the integration of accessories such as optics, torches and lasers; the availability of both a fully automatic version for military use and a semi-automatic version compliant with civilian legislation makes it a versatile design capable of meeting a wide range of user requirements.

Compact Manoeuvrability:

With a total length of just 355 mm, it is ideal for confined spaces and in-vehicle operations.

Robust Structure:

Aviation-grade aluminium bodies and a 4140 steel barrel ensure durability under stress.

User-Friendly Controls:

A Glock-style magazine catch and a simple recoil mechanism for reliable and intuitive use.

Rapid Successive Shots:

The lightweight slide and balanced recoil system deliver high rates of fire and minimal muzzle rise.

Versatile Accessory Compatibility:

Full-length STANAG Picatinny rail; supports optics, torches and laser attachments.

Feature	Value
Caliber	9 × 19 mm NATO / Parabellum
Magazine	Glock type detachable box magazine
Total Length	355 mm (approx. 14 inches)
Barrel	4140 steel, 165 mm (approx. 6.5 inches)
Weight (empty)	2,300 g (approx. 81 oz)
Lower Receiver	7075 aluminum
Upper Receiver and Handguard	6063 aluminum
Operating Principle	Simple blowback
Twist Rate and Number of Grooves	1:10", 4 grooves
Muzzle Velocity	410 m/s (approx. 1345 ft/s)
Effective Range	150 m (approx. 164 yd)
Flash Hider	H&K MPS type
Trigger Pull Weight	2.5 – 4.0 N
Accessory Rail	NATO STANAG 4694 Picatinny
Maintenance	Easy disassembly and quick field cleaning

KLK-762 PL

7.62×25 mm Light Machine Gun

[KLK-762 PL]
[MODEL]



[7.62X25]

[KALKAN]

Penetrating Power:
The 7.62×25 mm armour-piercing round provides superior penetration at long range.

High Rate of Fire (RoF):
800 rounds per minute (rpm) for maximum suppressive fire or high rate of fire in close-quarters (urban) combat.

Durable Coating:
The Melanite® coating on the barrel and slide (slide) offers resistance to wear and corrosion (rust).

Modular Adaptability:
Full-length Picatinny rail for all attachments (accessories).

The KLK-762 delivers superior penetration against targets even at long range, thanks to its 7.62×25 mm armour-piercing ammunition. With a high rate of fire of up to 800 rounds per minute, it provides the operator with maximum firepower, particularly in close-quarters combat and situations requiring suppressive fire. The Melanite® coating applied to the barrel and slide (carriage) provides extra resistance to wear and corrosion, thereby extending the weapon's service life under demanding conditions. Furthermore, the full-length Picatinny rail on the receiver allows for the easy integration of all kinds of tactical accessories, offering a high level of operational flexibility (modularity).

Feature	Value
Caliber	7.62 × 25 mm
Weight (8" barrel)	2,650 g (approx. 5.84 lb)
Total Length	340 mm (approx. 17.32 in)
Barrel Options	165 mm (6.5 inches), 205 mm (8 inches), 254 mm (10 inches)
Rate of Fire	800 rounds/min (rpm)
Operating Principle	Delayed blowback
Stock	Aluminum (foldable/telescopic)
Receiver	Upper 6082 series aluminum; Lower 7075 series aluminum
Magazine	32 rounds
Trigger Pull Weight	30-35 N (approx. 6.7-7.9 lbf)
Accessory Rail	150 m (approx. 164 yd)
Effective Range	200 m (approx. 219 yd)
Muzzle Velocity	550 m/s (approx. 1804 ft/s)



Tactical Pistols

[KLK-GN4]
[KLK-BR9]
[KLK-FSB762]
[KLK-P9]
[KLK-P9 SPORT]

KLK-GN 4

9×19 mm Tactical Pistol

[KLK-GN 4]
[MODEL]



[9X19]

[KALKAN]

Feature	Value
Caliber	9 × 19 mm
Weight (empty magazine)	603 g (approx. 1.33 lb)
Total Dimensions	185 × 32 × 128 mm (approx. 7.28 × 1.26 × 5.04 inches)
Frame	Polymer
Barrel Length	101.6 mm (4 inches)
Magazine	15 rounds (Glock style)
Operating Principle	Safe Action™ (Safe Movement) blowback
Safety	Integrated trigger safety
Accessory Rail	MIL-STD 1913 Picatinny
Trigger Pull Weight	22 N (approx. 4.9 lbf)

KLK-BR 9

9x19mm Tactical Pistol

[KLK-BR 9]
[MODEL]



[9X19]

[KALKAN]

Feature	Value
Operating Principle (System)	Hybrid Semi-Automatic (Kinetic & Short Gas Piston)
Caliber / Chamber	12 Gauge / 76mm (Smoothbore Barrel)
Total Length	102 cm with 47 cm Barrel
Magazine Capacity	5+1 / 7+1
Barrel Options	47 cm
Stock Coating (Surface) Options	Synthetic / Camouflage
Receiver Surface (Material)	Aluminum Alloy
Chokes	Fixed Modified Choke
Average Weight	3.30 kg

KLK-FSB 762

7.62×25 mm Tactical Pistol

[KLK-FSB762]
[MODEL]



[7.62X25]

[KALKAN]

Feature	Value
Caliber	7.62 × 25 mm Tokarev
Weight (empty magazine)	1,100 g (approx. 2.43 lb)
Total Dimensions (LxWxH)	220 × 38 × 135 mm (approx. 8.66 × 1.50 × 5.31 inches)
Barrel	120 mm (approx. 4.72 inches), QPQ nitriding + Melanite® coated
Frame and Slide	4140 steel, Melanite® coating
Magazine Capacity	9 + 1 rounds (M57 Zastava type)
Operating Principle	Short recoil, locked breech, Single-Action
Safety	Manual thumb safety

KLK-P9

9x19mm Tactical Pistol

[KLK-P9]
[MODEL]



[9X19]

[KALKAN]

Feature	Value
Caliber	9 × 19 mm (9 mm NATO)
Weight (empty magazine)	735 g (approx. 1.62 lb)
Total Dimensions	191.8 × 32 × 33 mm (LxWxH) (approx. 7.55 × 1.26 × 1.30 inches)
Frame	Polymer
Barrel Length	105.5 mm (4.15 inches)
Magazine	17 + 1 rounds (CZ75 Mec-Gar)
Operating Principle	Single-action semi-automatic
Safety	Manual thumb safety
Sights	Mechanical (fixed)
Accessory Rail	MIL-STD 1913 Picatinny
Trigger Pull Weight	18-20 N (approx. 4.0-4.5 lbf)

KLK-P9 SPORT

9x19mm Tactical Pistol

[KLK-P9 SPORT]
[MODEL]



[9X19]

[KALKAN]

Specially designed for sport shooting and competitions, this platform perfectly controls recoil thanks to its full-length aluminium lower receiver, whilst its extended magazine well (magwell) allows for ultra-fast magazine changes. It is equipped with an optics-compatible cover plate and a bright fibre-optic sighting system to provide the shooter with a ‘competition-ready’ experience straight out of the box. The ambidextrous slide stop and magazine release, added with the comfort of both right- and left-handed shooters in mind, maximise operational ergonomics. In addition to all these performance features, the high-visibility orange details—designed to ensure instant target identification during matches—lend the firearm a distinctive character, both functionally and aesthetically.

Feature	Value
Caliber	9 × 19 mm NATO/Parabellum
Weight (empty magazine)	992 g (approx. 2.19 lb)
Total Dimensions	209 × 33 × 146 mm (approx. 8.23 × 1.30 × 5.75 inches)
Frame	7075 series aluminum
Barrel Length	127 mm (5 inches) (approx. 5 inches)
Magazine	17 + 1 rounds (CZ75 Mec-Gar)
Operating Principle	Single-action semi-automatic
Safety	Manual thumb safety
Sights	Fiber optic front sight; adjustable rear sight
Accessory Rail	MIL-STD 1913 Picatinny
Trigger Pull Weight	23-25 N (approx. 5.2-5.6 lbf)

Controlled Recoil:

A full-size aluminium lower receiver for ultra-fast magazine changes and extended magazine well.

Ready for the Match:

Optically compatible (ready-to-fit) cover plate and bright fibre-optic sighting system.

Controls Suitable for Two-Handed Use:

Slide stop (release) and magazine catch for right- or left-handed shooters.

Distinctive Finish (Appearance):

The colour orange, which offers high visibility, is used for instant target identification during matches (competitions).



Ballistics Bulletproof Vest

[KLK-BV01SA]
[KLK-BV02SA]
[KLK-BV03SA]
[KLK-BV01FA]
[KLK-BV02FA]
[KLK-BV03FA]

KLK-BV01SA

Ballistic Steel Vest

[NGD-BV01SA]
[MODEL]



[MOLLE]

[KALKAN]

Feature	Value
Emergency Release System	Single-handed 2-point system
Webbing (Accessory) System	MOLLE compatible
Front Abdominal Flap	Secures the outer cummerbund
Shoulder Strap System	Adjustable, Tweave comfortable inner surface and emergency evacuation/drag strap
Cummerbund System	Multi-cummerbund structure
Fabric / Material	Flame retardant 1000 D Nylon 6,6 (design that distributes weight from shoulders to waist)
Lower Back / Kidney Protection	Contains protective inner panel against shrapnel effects
Side Ballistic Plates	Removable and adjustable

KLK-BV02SA

Ballistic Steel Vest

[NGD-BV02SA]
[MODEL]



[MOLLE]

[KALKAN]

Feature	Value
Emergency Release System	Single-handed 2-point system
Webbing (Accessory) System	MOLLE compatible
Front Abdominal Flap	Secures the outer cummerbund
Shoulder Strap System	Adjustable, Tweave comfortable inner surface and emergency evacuation/drag strap
Cummerbund System	Multi-cummerbund structure
Fabric / Material	Flame retardant 1000 D Nylon 6,6 (design that distributes weight from shoulders to waist)
Lower Back / Kidney Protection	Contains protective inner panel against shrapnel effects
Side Ballistic Plates	Removable and adjustable

KLK-BV03SA

Ballistic Steel Vest

[KLK-BV03SA]
[MODEL]



[MOLLE]

[KALKAN]

Feature	Value
Emergency Release System	Single-handed 2-point system
Webbing (Accessory) System	MOLLE compatible
Front Abdominal Flap	Secures the outer cummerbund
Shoulder Strap System	Adjustable, Tweave comfortable inner surface and emergency evacuation/drag strap
Cummerbund System	Multi-cummerbund structure
Fabric / Material	Flame retardant 1000 D Nylon 6,6 (design that distributes weight from shoulders to waist)
Lower Back / Kidney Protection	Contains protective inner panel against shrapnel effects
Side Ballistic Plates	Removable and adjustable

KLK-BV01FA

Ballistic Steel Vest

[NGD-BV01FA]
[MODEL]



[MOLLE]

[KALKAN]

Feature	Value
Emergency Release System	Single-handed 2-point system
Webbing (Accessory) System	MOLLE compatible
Front Abdominal Flap	Secures the outer cummerbund
Shoulder Strap System	Adjustable, Tweave comfortable inner surface and emergency evacuation/drag strap
Cummerbund System	Multi-cummerbund structure
Fabric / Material	Flame retardant 1000 D Nylon 6,6 (design that distributes weight from shoulders to waist)
Lower Back / Kidney Protection	Contains protective inner panel against shrapnel effects
Side Ballistic Plates	Removable and adjustable

KLK-BV02FA

Ballistic Steel Vest

[KLK-BV02FA]
[MODEL]



[MOLLE]

[KALKAN]

Feature	Value
Emergency Release System	Single-handed 2-point system
Webbing (Accessory) System	MOLLE compatible
Front Abdominal Flap	Secures the outer cummerbund
Shoulder Strap System	Adjustable, Tweave comfortable inner surface and emergency evacuation/drag strap
Cummerbund System	Multi-cummerbund structure
Fabric / Material	Flame retardant 1000 D Nylon 6,6 (design that distributes weight from shoulders to waist)
Lower Back / Kidney Protection	Contains protective inner panel against shrapnel effects
Side Ballistic Plates	Removable and adjustable

KLK-BV03FA

Ballistic Steel Vest

[NGD-BV03FA]
[MODEL]



[MOLLE]

[KALKAN]

Feature	Value
Emergency Release System	Single-handed 2-point system
Webbing (Accessory) System	MOLLE compatible
Front Abdominal Flap	Secures the outer cummerbund
Shoulder Strap System	Adjustable, Tweave comfortable inner surface and emergency evacuation/drag strap
Cummerbund System	Multi-cummerbund structure
Fabric / Material	Flame retardant 1000 D Nylon 6,6 (design that distributes weight from shoulders to waist)
Lower Back / Kidney Protection	Contains protective inner panel against shrapnel effects
Side Ballistic Plates	Removable and adjustable

Ballistic Steel Helmet

[KLK-PASGT]
[KLK-AK PASGT]
[KLK-MICH]
[KLK-FAST]

KLK-PASGT

Ballistic Steel Helmet

[KLK-PASGT]
[MODEL]



[MOLLE]

[KALKAN]

This design offers maximum protection against bullet and shrapnel threats and is used with confidence by law enforcement agencies and military units worldwide. It is manufactured from high-strength, heat- and impact-resistant synthetic aramid material, and is available in a range of sizes to suit every user.

Protection	Size	Material	Circum-ference	Size (LxWxH)	Thickness (mm)	Weight (KG)
NIJ IIIA 9mm	M	PE	54-58	268 X 243 X 170	8.0+0.2	1.25+0.05
NIJ IIIA / .44	S	PE	54-56	255 X 235 X 165	9.4+0.2	1.25+0.05
	M		56-58	270 X245 X175	9.4+0.2	1.35+0.05
	L		58-60	285 X 254 X 180	9.4+0.2	1.43+0.05
	XL		60-62	300 X 270 X 185	9.4+0.2	1.5+0.05
NIJ IIIA 9mm/.44	S	Aramid	53-57	255 X 233 X 170	7.7+0.2	1.40+0.05
	M		56-60	267 X 242 X 176	7.7+0.2	1.45+0.05
	L		59-64	282 X 256 X 180	7.7+0.2	1.50+0.05

KLK-AK PASGT

Ballistic Steel Helmet

[KLK-AKPASGT]
[MODEL]



[MOLLE]

[KALKAN]

Developed to meet specific end-user requirements, this helmet provides a wide and reliable area of protection around the head. It offers a high level of ballistic protection and is specifically designed to withstand AK rounds with soft steel cores.

Style	Serial No.	Material	Bulletproof	Size	Circum-ference CM	Dimension LXWXH	Thickness MM	Weight KG
PASGT FOR AK	NGD-HP-AKN	PE	AK (Lead Core) 100m	M	54-58	284 X 254 X 185	18+0.2	2.45+0.05
				L	58-62	292 X 265 X 190	18+0.2	2.50+0.05
			AK (Lead Core) 50m	M	54-58	284 X 254 X 185	18+0.2	2.45+0.05
				L	58-62	292 X 265 X 190	18+0.2	2.50+0.05
			AK (Lead Core) 5m	M	54-58	284 X 254 X 185	18+0.2	2.45+0.05
				L	58-62	292 X 265 X 190	18+0.2	2.50+0.05

KLK-MICH

Ballistic Steel Helmet

[KLK-MICH]
[MODEL]



[MOLLE]

[KALKAN]

It is an innovative design trusted by military units, police forces and SWAT teams worldwide. It offers a wide area of protection against bullet threats and shrapnel, ensuring a high level of reliability. Manufactured from synthetic PE/UHMWPE material, known for its lightness and resistance to UV (ultraviolet) rays, it offers a long service life even under demanding conditions.

Protection	Size	Material	Circum-ference	Size LXWXH	Thickness mm	Weight KG
NIJ IIIA 9mm	M	PE	54-58	268 X 243 X 170	8.0+0.2	1.25+0.05
NIJ IIIA / .44	S	PE	54-56	255 X 235 X 165	9.4+0.2	1.25+0.05
	M		56-58	270 X245 X175	9.4+0.2	1.35+0.05
	L		58-60	285 X 254 X 180	9.4+0.2	1.43+0.05
	XL		60-62	300 X 270 X 185	9.4+0.2	1.5+0.05
NIJ IIIA 9mm/.44	S	Aramid	53-57	255 X 233 X 170	7.7+0.2	1.40+0.05
	M		56-60	267 X 242 X 176	7.7+0.2	1.40+0.05
	L		59-64	282 X 256 X 180	7.7+0.2	1.40+0.05

KLK-FAST

Ballistic Steel Helmet

[NGD-BV03FA]
[MODEL]



[MOLLE]

[KALKAN]

It is recognised as one of the most effective and reliable helmet designs worldwide against armed threats. It is manufactured from synthetic Aramid material, offering high strength, heat resistance and durability. Thanks to its ergonomic design, which allows for quick donning and doffing, it is an ideal solution for military units, the police, SWAT teams, national security and border protection agencies.

Protection	Size	Material	Circum-ference	Size U X G X Y	Thickness mm	Weight KG
NIJ IIIA 9mm	L	PE	57-60	273 X 215 X 155	8.0+0.2	1.35+0.05
	XL		60-63	275 X 220 X 160	8.0+0.2	1.40+0.05
NIJ IIIA / .44	L		57-60	275 X 218 X 158	9.4+0.2	1.45+0.05
NIJ IIIA 9mm/.44	L	Aramid	54-59	270 X 214 X 177	8.0+0.2	1.50+0.05
	XL		59-64	277 X 228 X180	8.0+0.2	1.60+0.05

Military Bags

[KLK-MTBP35]
[KLK-MTBP45]
[KLK-MTBP110]
[KLK-MTBP80]

KLK-MTBP35

Tactical Military Bag

[KLK-MTBP35]
[MODEL]



[NGD]

[KALKAN]

KLK-NGD Tactical 35 L Off-Road Rucksack; manufactured to suit off-road conditions in terms of its design, construction and fabric. Offering a unique design in this category, this rucksack model ensures comfort with its spacious and ergonomic construction. It is perfectly designed to meet the size requirements of military personnel and mountaineers in the field. Offering both comfort and practicality thanks to its ease of carry, it is also manufactured from high-quality fabric. Its flexible interior capacity, zip details and side pockets allow for the easy transport of a wide range of items. The KLK-NGD Tactical 35 L Off-Road Rucksack is manufactured to withstand harsh weather conditions, whether in rain or sunshine. Furthermore, its carrying structure and system ensure that the rucksack stands upright.

Colour:	Camouflage (Colour and pattern can be selected.)
Capacity:	35 litres
Dimensions:	58 x 30 x 18 cm
Areas of Use:	**Sol**diers, mountaineers, campers and everyday use

KLK-MTBP45

Tactical Military Bag

[NGD-MTBP45]
[MODEL]



[MOLLE]

[KALKAN]

The KLK-NGD 45-litre Tactical Rucksack is a product specially designed for soldiers, featuring a comfortable and high-quality construction. Thanks to the quality of service it provides in this field, it is extremely easy to use. It is a model produced entirely in Turkey. Manufactured to suit the working conditions of soldiers in challenging environments, it ensures ease of use thanks to its carrying capacity. It is designed to accommodate a soldier’s most basic needs in terms of volume, whilst also featuring a fastening system to ensure it can be carried easily and kept securely in place. Thanks to its orthopaedic back support, it ensures a much more comfortable experience during long and arduous marches.

Colour:	Camouflage (Colour and pattern can be selected.)
Capacity:	45 litres
Dimensions:	50x30x30 cm
Areas of Use:	Soldiers, mountaineers, campers and everyday use

KLK-MTBP110

Tactical Military Bag

[KLK-MTBP110]
[MODEL]



[NGD]

[KALKAN]

KLK-MTBP110 Tactical 110 L Off-Road Rucksack; manufactured to suit off-road conditions in terms of its design, construction and fabric. Offering a unique design in this category, this rucksack model ensures comfort with its spacious and ergonomic construction. It is optimally designed to meet the size requirements of military personnel and mountaineers in the field. Offering both comfort and practicality thanks to its ease of carry, it is also manufactured from high-quality fabric. Its flexible interior space, zip details and side pockets allow for the easy transport of a wide range of items.
The KLK-MTBP110 Tactical 110 L Off-Road Rucksack is manufactured to withstand harsh weather conditions, whether in rain or sunshine. Furthermore, its carrying structure and system ensure that the rucksack stands upright.

Colour:	Camouflage (Colour and pattern can be selected.)
Capacity:	110 litres
Dimensions:	72 cm
Areas of Use:	Soldiers, mountaineers, campers and everyday use

KLK-MTTB80

Military Carry Bag

[KLK-MTTB80]
[MODEL]



[MOLLE]

[KALKAN]

The KLK-MTTB80 Original Army Carry Bag is made from extremely durable Miltech 1000D Cordura fabric. Thanks to its PU-coated layer, it protects your military equipment from rain and damp. It is handcrafted to meet the needs of soldiers on even the most demanding missions. The double-stitched polyamide woven straps that wrap around the bag and form the carrying handles are exceptionally strong and durable. It is designed to withstand heavy loads, as intended. Its ability to be used as a rucksack makes it much more practical. With its 5-pocket design, it offers a variety of options to suit different needs.

Colour:	Camouflage (Colour and pattern can be selected.)
Capacity:	110 litres
Areas of Use:	Soldiers, mountaineers, campers and everyday use

KLK-MTTB110

Military Carry Bag

[KLK-MTBP110]
[MODEL]



[NGD]

[KALKAN]

The KLK-MTTB110 Original Military Carry Bag is made from extremely durable Miltech 1000D Cordura fabric. The KLK-MTTB110 military carry bag protects your military equipment from rain and damp thanks to its PU-coated layer. It is handcrafted to meet the needs of soldiers on even the most demanding missions. The double-stitched polyamide woven straps that wrap around the bag and form the carrying handles are exceptionally strong and durable. It is manufactured to withstand heavy loads, as required for its intended purpose. Furthermore, the fact that it can also be used as a rucksack makes it even more practical. Its 5-pocket design offers versatility to suit a variety of needs. It can be produced in different colours and patterns. Capacity: 110 litres.

Colour: Camouflage (Colour and pattern can be selected.)
Dimensions: 72 cm
Areas of Use: Soldiers, mountaineers, campers and everyday use

[KLK-MTBP110]
[MODEL]



[DUST]

[KALKAN]

[KLK-MTBP110]
[MODEL]



[BLACK]

[KALKAN]

[KLK-MTBP110]
[MODEL]



[FOREST]

[KALKAN]

Telephone

+90 242 745 01 08

Mail & Web

M. info@kalkansavunma.com

W. kalkansavunma.com

Our offices

Head Office — Antalya / Turkey

Kırcami Neighbourhood, Perge Boulevard, Emine Melli Business Centre, Block C, No. 71 D, Muratpaşa / Antalya / Turkey

Ankara Representative Office — Söğütözü / Turkey

SÖĞÜTÖZÜ | KOÇ TOWER
Kalkan Defence Industry and Technologies Plc
Koç Tower, Söğütözü, 06510 Çankaya / Ankara / Turkey

International Operations

Europe | MENA | CIS | USA





KALKAN DEFENCE
INDUSTRY AND TECHNOLOGIES INC.